PART NO.	BELT WIDTH	DIM "A" MAX FRAME LENGTH	DIM "B" BLADE COVERAGE
35899-24XX12XXX	24.00 [500-650]	72.00 [1829]	12.00 [305]
35899-24XX18XXX	24.00 [500-650]	72.00 [1829]	18.00 [457]
35899-30XX18XXX	30.00 [650-800]	78.00 [1981]	18.00 [457]
35899-30XX24XXX	30.00 [650-800]	78.00 [1981]	24.00 [610]
35899-36XX24XXX	36.00 [800-1000]	84.00 [2134]	24.00 [610]
35899-36XX30XXX	36.00 [800-1000]	84.00 [2134]	30.00 [762]
35899-42XX30XXX	42.00 [1000-1200]	90.00 [2286]	30.00 [762]
35899-42XX36XXX	42.00 [1000-1200]	90.00 [2286]	36.00 [914]
35899-48XX36XXX	48.00 [1200-1400]	96.00 [2438]	36.00 [914]

MOUNTING LOCATION CHART	
DIM "C" HEAD PULLEY DIAMETER *	DIM "D"
16 [400]	5.75 [146]
20 [500]	5.50 [140]
24 [600]	5.25 [133]
28 [700]	5.00 [127]
30-120 [750-3000]	4.75 [120]

* INCLUDES BELT AND LAGGING

ASSEMBLY PART NO.	COLOR
35899-XXXXXXX	ORANGE
35899-XXXXXXBIX *	BLACK
35899-XXXXXXBRX	BROWN
35899-XXXXXXCLX	TAN
35899-XXXXXXGRX	GREEN
35899-XXXXXXNBX	NAVY BLUE
35899-XXXXXXCYX *	YELLOW
35899-XXXXXXYLX	YELLOW

* ONLY OFFERED IN SEGMENTED (10)

ITEM	QTY.	DESCRIPTION	PART NUMBER
1	1	MARTIN® QC™#1 XHD ASSEMBLY	SEE CHART
2	1	MARTIN® XHD SPRING TENSIONER	38003
3	1	MARTIN® LOW PROFILE ACCESS DOOR	CYA-1218

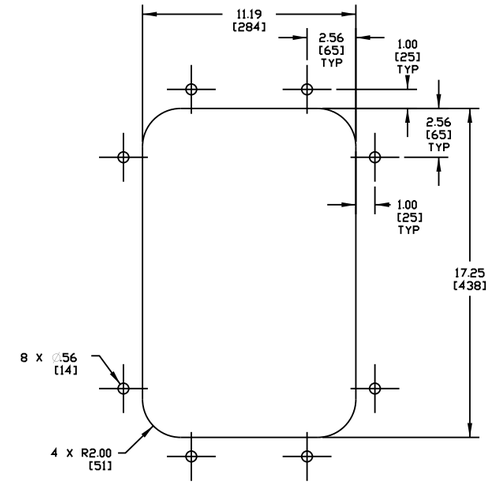

ACCESS DOOR CUTOUT DETAIL
SCALE 1/4

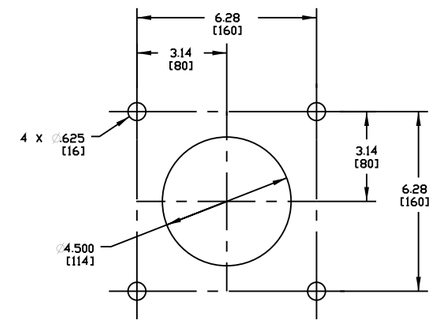

TENSIONER CHUTE CUTOUT DETAIL
SCALE 3/8
TYPICAL BOTH SIDES

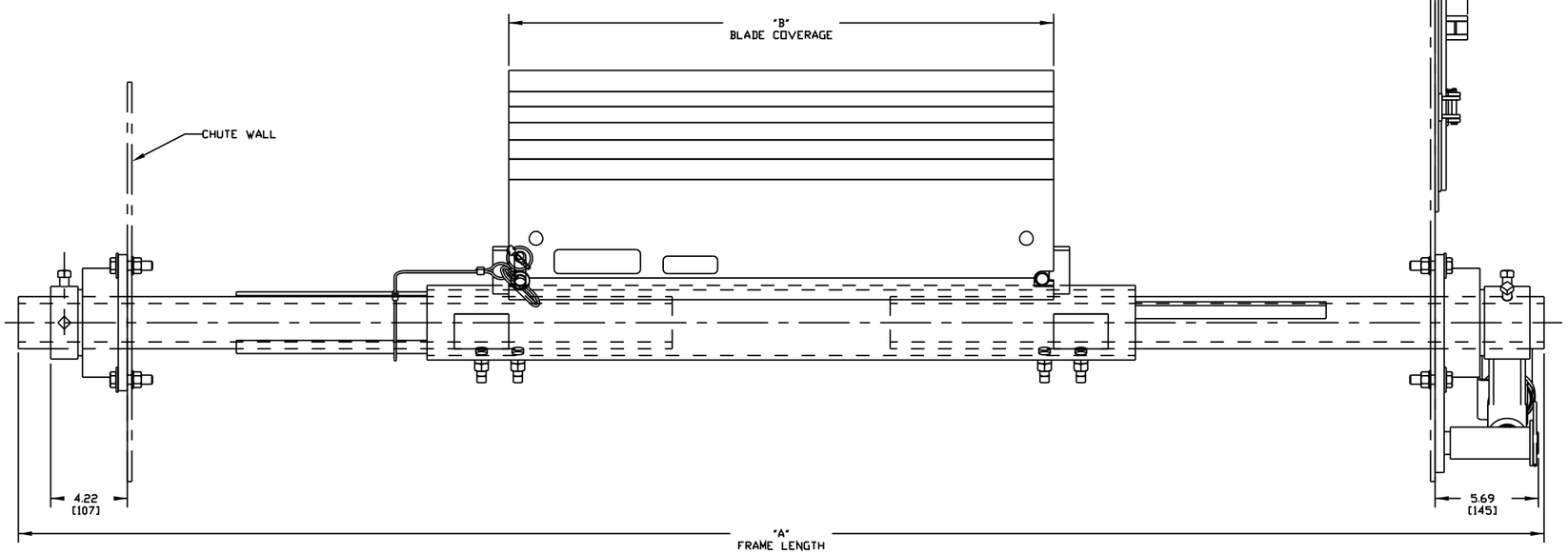

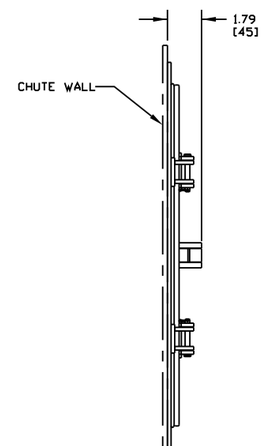

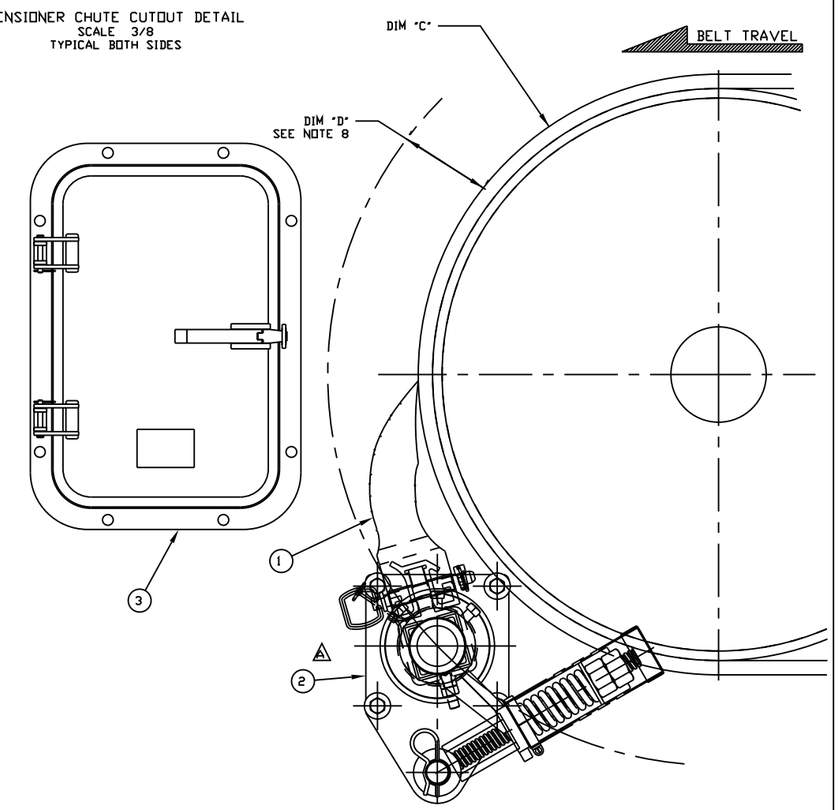

NOTES:
1) ALL DIMENSIONS ARE GIVEN IN INCHES [MM].
2) ALL DIMENSIONS ARE FOR REFERENCE ONLY.
3) FOR EASY ACCESSIBILITY AND MAINTENANCE, MARTIN ENGINEERING RECOMMENDS BOLTING CLEANER TO EXISTING STRUCTURE WHEN APPLICABLE.
4) CLEANER IS SHOWN IN RECOMMENDED WORKING POSITION.
5) WHERE EXTREME OR UNUSUAL CONDITIONS EXIST, OR SPECIAL MAINFRAME LENGTHS ARE REQUIRED CONTACT MARIN ENGINEERING.
6) REFER TO OPERATOR'S MANUALS M3504, & M3127 FOR COMPLETE INSTALLATION INSTRUCTIONS.
7) FOR BELT WIDTHS 48.00 [1200-1400] AND BIGGER, MARTIN ENGINEERING RECOMMENDS USING A DUAL XHD SPRING ARM TENSIONER.
8) CLEANER CAN BE LOCATED ANYWHERE ALONG THE ARC, AS LONG AS THE MAINFRAME IS OUT OF MATERIAL TRAJECTORY AND THE BLADE TIPS ARE BELOW THE HORIZONTAL CENTERLINE OF THE HEAD PULLEY.
9) THE XHD QC #1 PRE-CLEANER BLADES ARE DESIGNED TO REMOVE HEAVY CARRYBACK ONLY. DO NOT OVERTENSION.
10) ONE FULL TURN OF THE TENSIONING NUT ON THE SPRING TENSIONER IS EQUAL TO .20 [5].
11) BLADE COVERAGE IS LESS THAN BELT WIDTH, DUE TO POSSIBLE MISTRACKING OR DAMAGED EDGES OF THE BELT.
12) THE FIRST TWO XX'S OF THE CLEANER PART NUMBER INDICATE BELT WIDTH. THE THIRD X INDICATES SOLID (1) OR SLIT (0). THE FOURTH X INDICATES SOLID (1) OR SEGMENTED (0). THE NEXT TWO XX'S INDICATE BLADE WIDTH, THE NEXT TWO XX'S INDICATE BLADE COLOR/MATERIAL. THE LAST X INDICATES IF A TENSIONER (T) IS INCLUDED.
EXAMPLE: 35899-361130BR (36.00 BELT WIDTH, 30.00 SOLID, BROWN BLADE).

NO.	DESCRIPTION	ECN	DATE	BY
B	ADDED 35899-XXXXXXBIX & -XXXXXXCYX TO THE CHART	----	04/30/12	MJB
A	UPDATED BLADE PROFILE AND DIMS / UPDATED NOTES AND CHARTS / CHGD 34995-1218 TO CYA-1218 AND UPDATED CHUTE CUTOUT DETAIL	12574	03/03/09	JAP

REVISION

©Copyright 2012 Martin Engineering.All rights reserved. Covered by U.S. and Foreign patents pending and issued. R and TM indicate trademarks of Martin Engineering.

MARTIN ENGINEERING-USA
NEPONSET, IL USA

TITLE: MARTIN® QC™ #1 XHD PRE-CLEANER WITH XHD SPRING TENSIONER AND 12X18 ACCESS DOOR

SALES DRAWING

PR10311

S50033-S

DRAWN	RND
DATE	01/31/06
CHECKED	
ENG.	JAP
DATE	02/07/06
APPROVED	JMM
DATE	02/07/06
SCALE	1/4